

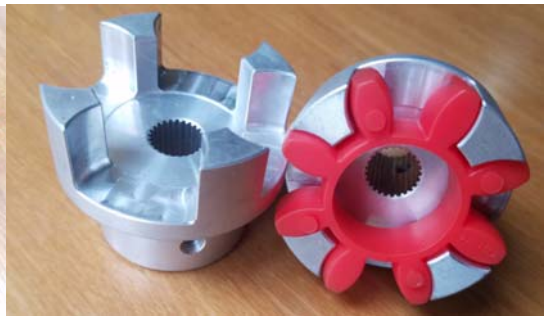

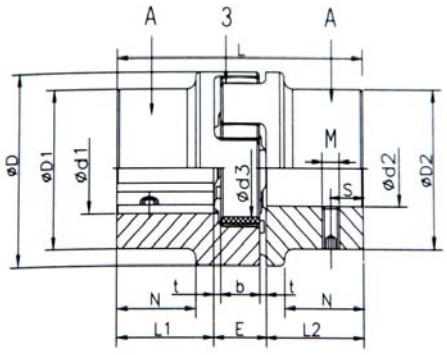

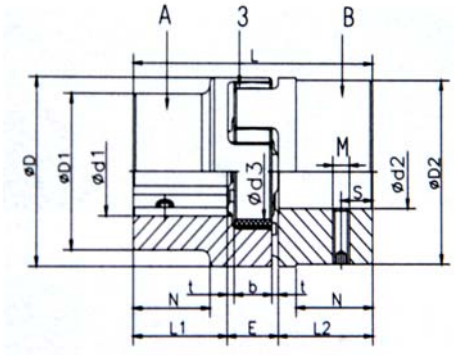

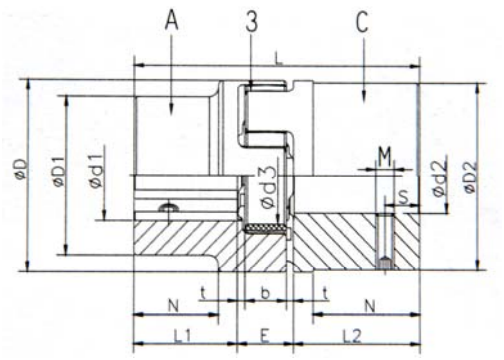

Aluminum Items

Item No.	Type	Rated Torque of Elastomer Nm			Finished Bore d	General Dimensions									Fixed Screw		
		92 SH A	98 SH A	64 SH D	d range	L	L1,L2	E	b	t	D	D1;D2	N	d3	M	S	T(Nm)
UJC-9	B	3	5	-	7-9	24	7	10	8	1	20	20	-	-	M2.5	3.5	0.76
UJC-14	B	7.5	12.5	-	6-16	35	11	13	10	1.5	30	30	-	10	M4	5	1.5
UJC-19	A	10	17	-	6-19	66	25	16	12	2	40	32	21	18	M5	10	2
	B				19-24							40	-				
UJC-24	A	35	60	-	9-24	78	30	18	14	2	55	40	24	27	M5	10	2
	B				22-28							55	-				
UJC-28	A	95	160	-	10-28	90	35	20	15	2.5	65	48	28	30	M8	15	10
	B				28-38							65					
UJC-38	A	190	325	405	12-48	114	45	24	18	3	80	66	37	38	M8	15	10
	B				39-45							79					
UJC-42	A	265	450	560	14-42	126	50	26	20	3	95	75	40	46	M8	20	10
	B				42-55							94					
UJC-48	A	310	525	655	15-48	140	56	28	21	3.5	105	85	45	51	M8	20	10
	B				48-60							102					
UJC-55	A	410	685	825	20-55	160	65	30	22	4	120	98	52	60	M10	20	17
	B				55-70							118					

Cast Iron Items

Item No.	Type	Rated Torque of Elastomer Nm			Finished Bore d	General Dimensions									Fixed Screw		
		92 SH A	98 SH A	64 SH D	d range	L	L1,L2	E	b	t	D	D1;D2	N	d3	M	S	T(Nm)
UJC-19	A	10	17	21	0-25	66	25	16	12	2	40	32	21	18	M5	10	2
	B											39					
UJC-24	A	35	60	75	0-35	78	30	18	14	2	55	40	24	27	M5	10	2
	B											54					
UJC-28	A	95	160	200	0-40	90	35	20	15	2.5	65	48	28	30	M8	15	10
	B											64					

UJC-38	A	190	325	405	0-48	114	45	24	18	3	80	66	37	38	M8	15	10
	B											78					
UJC-42	A	265	450	560	0-55	126	50	26	20	3	95	75	40	46	M8	20	10
	B											94					
UJC-48	A	310	525	655	0-62	140	56	28	21	3.5	105	85	45	51	M8	20	10
	B											104					
UJC-55	A	410	685	825	0-74	160	65	30	22	4	120	98	52	60	M10	20	17
	B											118					
UJC-65	A	625	940	1175	0-80	185	75	35	26	4.5	135	115	61	68	M10	20	17
	B											132	-				
UJC-75	A	1280	1920	2400	0-95	210	85	40	30	5	160	135	69	80	M10	25	17
	B											160	-				
UJC-90	A	2400	3600	4500	0-110	245	100	45	34	5.5	200	158	81	100	M12	30	40
	B											196	-				
UJC-100	A	3300	4950	6185	50-115	270	110	50	38	6	225	196	89	113	M12	30	40
UJC-110	A	4800	7200	9000	60-125	295	120	55	42	6.5	255	230	96	127	M16	35	80
UJC-125	A	6650	10000	12500	60-145	340	140	60	46	7	290	245	112	147	M16	40	80
UJC-140	A	8550	12800	16000	60-160	375	155	65	50	7.5	320	255	124	165	M20	45	140

Carbon Steel Items

Item No.	Type	Rated Torque of Elastomer Nm			Finished Bore d	General Dimensions									Fixed Screw		
		92 SH A	98 SH A	64 SH D	d range	L	L1,L2	E	b	t	D	D1;D2	N	d3	M	S	T(Nm)
UJC-9	B	3	5	6	0-9	24	7	10	8	1	20	20	-	-	M2.5	3.5	0.76
UJC-14	B	7.5	12.5	16	0-16	35	11	13	10	1.5	30	30	-	10	M4	5	1.5
UJC-19	A	10	17	21	0-25	66	25	16	12	2	40	32	20	18	M5	10	2
	B											40	-				
	C					90	37						-				
UJC-24	A	35	60	75	0-35	78	30	18	14	2	55	40	24	27	M5	10	2
	B											55	-				
	C					118	50						-				
UJC-28	A	95	160	200	0-40	90	35	20	15	2.5	65	48	28	30	M8	15	10
	B											65	-				
	C					140	60						-				
UJC-38	A	190	325	405	0-48	114	45	24	18	3	80	66	37	38	M8	15	10
	B											79					
	C					164	70						62				
UJC-42	A	265	450	560	0-55	126	50	26	20	3	95	75	40	46	M8	20	10
	B											94					
	C					176	75						65				
UJC-48	A	310	525	655	0-62	140	56	28	21	3.5	105	85	45	51	M8	20	10
	B											102					
	C					188	80						69				
UJC-55	A	410	685	825	0-74	160	65	30	22	4	120	98	52	60	M10	20	17
	B											118					
	C					210	90						77				
UJC-65	A	625	940	1175	0-80	185	75	35	26	4.5	135	115	61	68	M10	20	17
	B											132					
	C					235	100						86				
UJC-75	A	1280	1920	2400	0-95	210	85	40	30	5	160	135	69	80	M10	25	17
	B											158					
	C					260	110						94				
UJC-90	A	2400	3600	4500	0-110	245	100	45	34	5.5	200	160	81	100	M12	30	40
	B											196					
	C					295	125						106				



Unik Jaw coupling grooving type is backlash free, using screws after slotting to eliminate the clearance. This grooving type coupling is suitable for power transmission on main shaft, elevating platform and machine tool.

Mat'l: Alluminum size below 42
Steel size over 42

Finish: Natural or Anodizing

Finished bore according to ISO fit H7

Keyway width: DIN 6885/1

The Tolerance: Js9

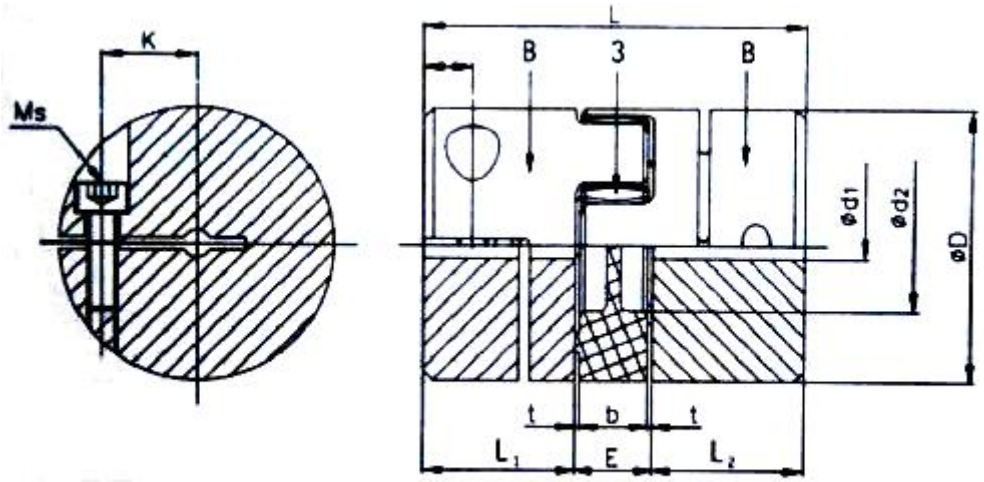

Item No.	Dimensions								Screw	Loking Torque
	D	d1 range	d2	L	L1,L2	E	b	t	Ms	T
UJC-19G	40	6-24	18	66	25	16	12	2	M6	10.5
UJC-24G	55	8-28	27	78	30	18	14	2	M6	10.5
UJC-28G	65	10-38	30	90	35	20	15	2.5	M8	25
UJC-38G	80	12-45	38	114	45	24	18	3	M8	25
UJC-42G	95	14-55	46	126	50	26	20	3	M10	69
UJC-48G	105	15-62	51	140	56	28	21	3.5	M12	120
UJC-55G	120	20-47	60	160	65	30	22	4	M12	120
UJC-65G	135	22-80	68	185	75	35	26	4.5	M12	120
UJC-75G	160	30-95	80	210	85	40	30	5	M16	295