

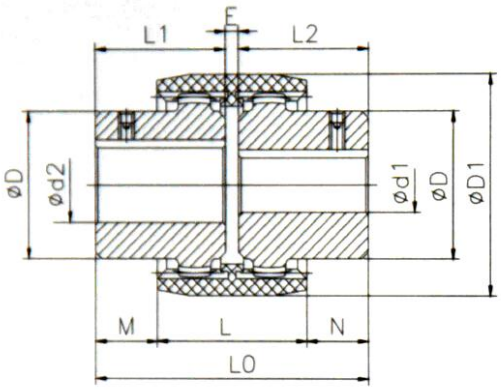

Features:

- Nylon-steel combined, maintenance free
- Compensation for axial, radial and angular misalignment
- Convenient axial plugging assembly
- Without bolts, pins, flanges to affect the balance or safety
- No requirement of lubrication, and excellent electrical insulation

Item No.		Module	Z	Pressure angle	De	Dp	Tooth Width
Normal	Lengthened						
UNL-14	UTNL-14-L	1.5	20	20°	33	30	8
UNL-19	UTNL-19-L	1.5	24	20°	39	36	8
UNL-24	UTNL-24-L	1.5	28	20°	45	42	8
UNL-28	UTNL-28-L	1.5	34	20°	54	51	10
UNL-32	UTNL-32-L	1.5	40	20°	63	60	10
UNL-38	UTNL-38-L	1.5	44	20°	69	66	12
UNL-42	UTNL-42-L	1.5	50	20°	78	75	14
UNL-48	UTNL-48-L	1.5	50	20°	78	75	14
UNL-55	UTNL-55-L	2	45	20°	94	90	16
UNL-65	UTNL-65-L	2.5	42	20°	110	105	20

Item No.		Bore		Dimensions(mm)								Rated Torque	Weight(kg)		
Normal	Lengthened	Min	Max	L1,L2	L0	L	M,N	E	Lengthen L1,L2	D1	D	N.m	Normal hub	Long hub	Nylon Sleeve
UNL-14	UNL-14-L	6	14	23	50	37	6.5	4	40	40	24	10	0.09	0.15	0.02
UNL-19	UNL-19-L	8	19	25	54	37	8.5	4	40	48	30	16	0.15	0.23	0.03
UNL-24	UNL-24-L	10	24	26	56	41	7.5	4	50	52	36	20	0.21	0.4	0.04
UNL-28	UNL-28-L	10	28	40	84	46	19	4	55	66	44	45	0.48	0.66	0.07
UNL-32	UNL-32-L	12	32	40	84	48	18	4	55	76	50	60	0.63	0.86	0.09
UNL-38	UNL-38-L	14	38	40	84	48	18	4	60	83	58	80	0.83	1.25	0.11
UNL-42	UNL-42-L	20	42	42	88	50	19	4	60	92	65	100	1.11	1.58	0.14
UNL-48	UNL-48-L	20	48	50	104	50	27	4	60	95	67	140	1.37	1.65	0.16
UNL-55	UNL-55-L	25	55	52	108	58	25	4	65	114	82	240	2.12	2.66	0.26
UNL-65	UNL-65-L	25	65	55	114	68	23	4	70	132	95	380	3.07	3.92	0.39